PENSTOCK SELECTION FORM

Doc#: SF-0001 R00

PROJECT INFORMATION:		CONTACT INFORMATION (of the person who fills out the form):
Customer:	Order# / Quote#:	Name:
Project Name:	Qty.: 1	Company:
Tag No(s).:		Date:

ORBINOX

1 PENSTOCK TYPE

4 side sealing:

- ☐ MU Penstock
- ☐ RC Square Flap Gate ☐ RR Round Flap Gate
- ☐ RB -4 side sealing Weir Gate - lowering type

3 side sealing (bottom and sides):

- ☐ CC Channel Gate
- ☐ RB -3 side sealing Weir Gate - lowering type
- ☐ AG Stop Gate
- ☐ SL Stop Log
- ☐ SA Aluminum Stop Log

2 DIMENSIONS

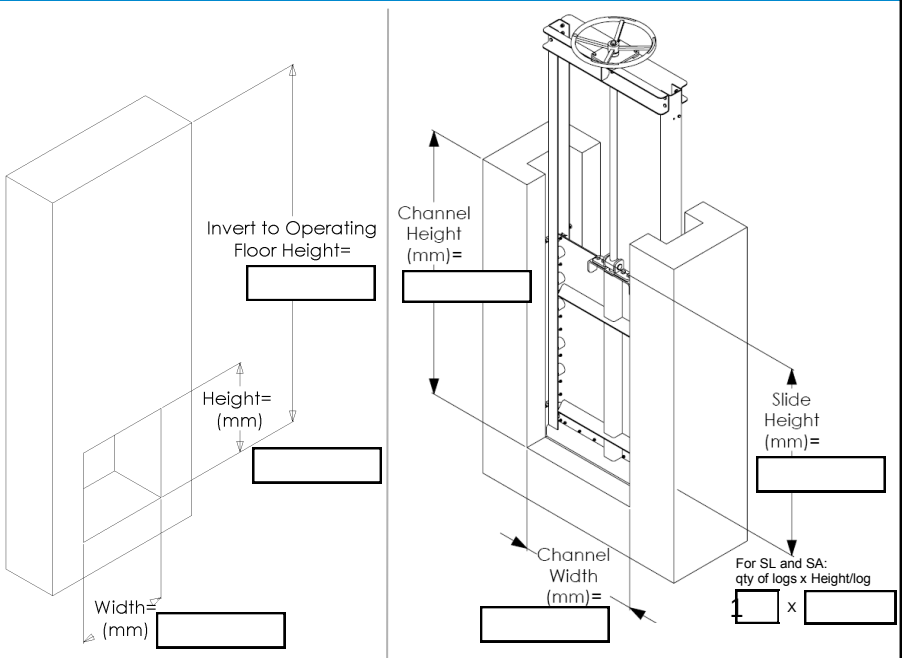

(MU, RB-4side sealing, RR/RC) (CC, RB-3side sealing, AG, SL, SA)

3 PENSTOCK CONFIGURATION

- ☐ Non Rising Stem (NRS) ☐ Rising Stem (RS)
- ☐ Uni-Directional ☐ Bi-Directional
- ☐ Closed Frame ☐ Open Frame

Slide Travel (as std equal to the slide height):

4 PRESSURE CONDITIONS

Seating Water Head, mwc:

Unseating Water Head, mwc (only for BI-dir. Gates):

Operating Water Head, mwc (when actuating the penstock):

5 ACTUATOR

5.1 Actuator Type:

- ☐ Handwheel
- ☐ Crank (w/ B.Gear and Sqr. Nut)
- ☐ Square Nut. Type: -
- ☐ Bevel Gear
- ☐ Electric Motor
- ☐ Pneumatic Cylinder
- ☐ Hydraulic Cylinder
- ☐ Lifting Handpole (for AG, SL, SA)
- ☐ Lifting Device (for AG, SL, SA)

5.2 Actuator Mounting:

- ☐ Inclined Floor Stand (a)
- ☐ Straight Floor Stand (b)
- ☐ Yoke Mounted (c)
- ☐ Floor Box (for Sqr.Nut)

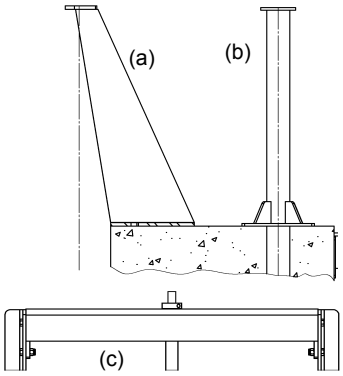

5.3 Position Indicator (for RS only)

- ☐ Mylar tape
- ☐ Limit Switch
- ☐ Proximity Switch

6 PENSTOCK MOUNTING

- ☐ Wall mounted (a)
- ☐ Embedded in concrete (b) (not available for MU<=1200x1200)
- ☐ Face mounted in existing channel (c)
- ☐ Round manhole (wall mounted)
  - -Inside Diameter (mm):
- ☐ Standard Flange (for RC and RR). -Type:

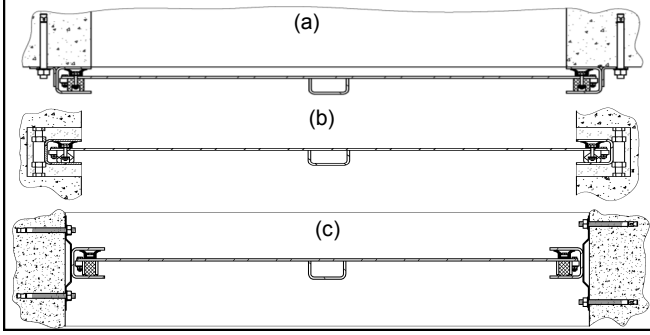

7 MATERIALS

	303 SS	304 SS	304L SS	316 SS	316L SS	Carbon Steel	EPDM	Clear PVC	Al. 6063T6 (only for SA)	Other:
Frame:		☐	☐	☐	☐				☐	
Slide:		☐	☐	☐	☐				☐	
Stem:	☐	☐		☐						
Extension:		☐		☐						
Pedestal:		☐	☐	☐	☐	☐				
Seal:							☐			
Stem Cover:						☐		☐		

8 REMARKS